PROFESSIONAL LOUDSPEAKERS

Made in Italy

HF10AK
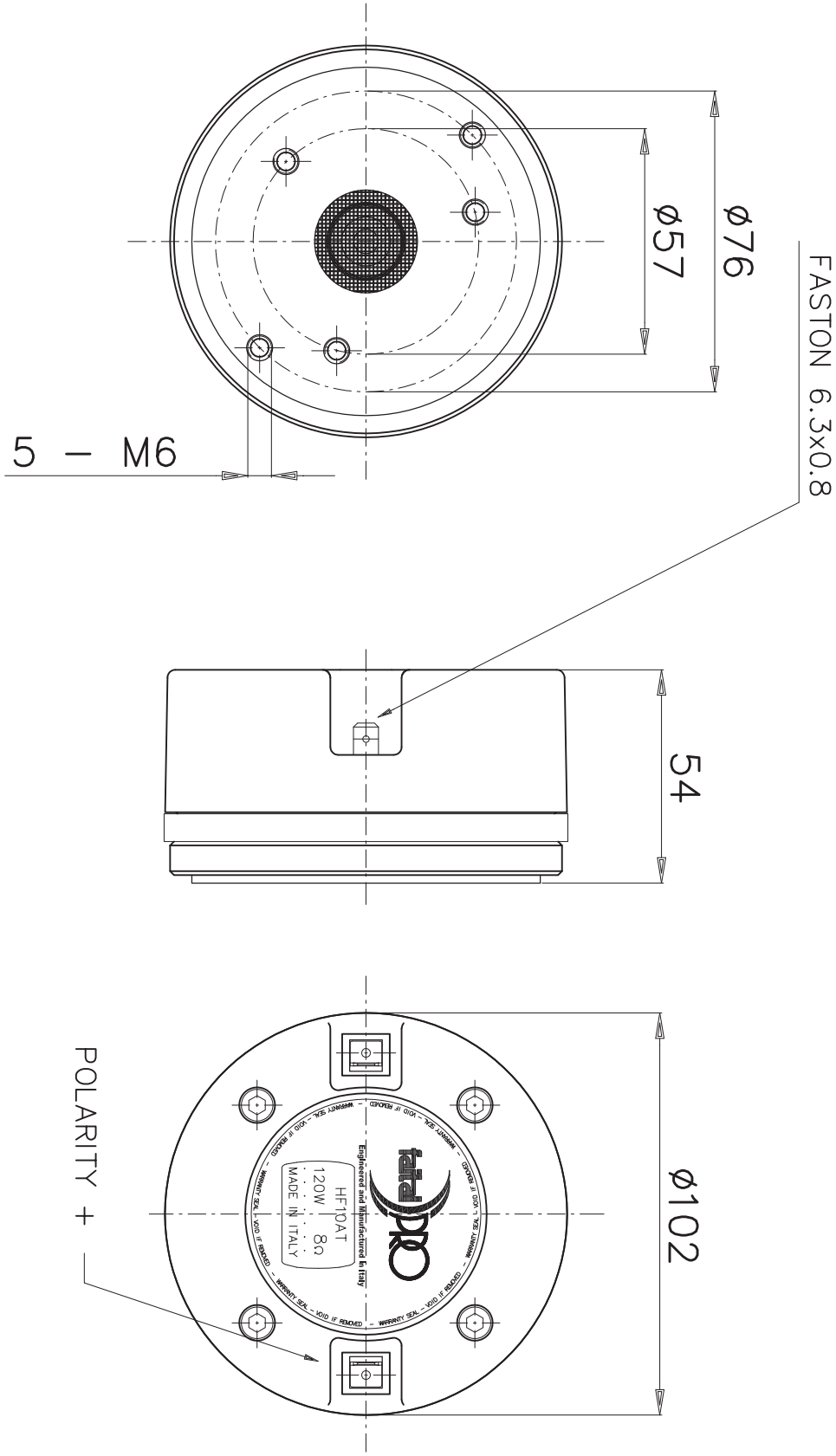
1” - 60 W - 110 dB - 8Ω